Preprints of the 18th IFAC World Congress
Milano (Italy) August 28 - September 2, 2011

Adaptive Control of a Quadrotor with Dynamic Changes in the Center of Gravity

Ivana Palunko and Rafael Fierro

Department of Electrical and Computer Engineering,
University of New Mexico, Albuquerque NM, USA
e-mail: {ipalunko, rfierro}@ece.unm.edu

Abstract: In this paper, we address the problem of quadrotor stabilization and trajectory tracking with dynamic changes in the quadrotor's center of gravity. This problem has great practical significance in many UAV applications. However, it has received little attention in literature so far. In this paper, we present an adaptive tracking controller based on output feedback linearization that compensates for dynamical changes in the center of gravity of the quadrotor. Effectiveness and robustness of the proposed adaptive control scheme is verified through simulation results. The proposed controller is an important step towards developing the next generation of agile autonomous aerial vehicles. This control algorithm enables a quadrotor to display agile maneuvers while reconfiguring in real time whenever a change in the center of gravity occurs.

Keywords: Adaptive Control; Nonlinear Control; Center of Mass; Unbalanced UAV; Quadrotor Modeling;

1. INTRODUCTION

Unmanned aerial vehicles are increasingly being considered as means of performing complex functions or assisting humans in carrying out dangerous missions within dynamic environments. Other possible applications include search and rescue, disaster relief operations, environmental monitoring, wireless surveillance networks, and cooperative manipulation. Creating these types of autonomous vehicles places severe demands on the design of control schemes that can adapt to different scenarios and possible changes of vehicle dynamics.

Quadrotor helicopters have become increasingly popular as unmanned aerial vehicle (UAV) research platforms. Many research groups have begun constructing quadrotor UAVs as robotics research tools (Bouabdallah et al. [2005]), (Castillo et al. [2005]), (Hoffmann et al. [2007]), and developing quadrotors as general-use UAVs (AscendingTechnologies [2010]) that are becoming more popular in research labs around the world. These aerial vehicles are being used in a wide spectrum of indoor (How et al. [2008]), (Michael et al. [2009]) and outdoor (Huang et al. [2009]), (He et al. [2008]) applications.

Because of significant application potential in a wide spectrum of scenarios, a lot of recent research has been dedicated to quadrotor modeling and control. Some classical papers in the area are (Bouabdallah et al. [2004]), (Hoffmann et al. [2007]). However, all of the reviewed literature assumes a balanced quadrotor model, i.e., the center of gravity (CoG) is assumed to be static and known. To the best of the authors' knowledge, no research that explicitly considers dynamic changes in CoG of UAVs has yet been published. A number of applications in other branches of robotics, for instance in industrial robotics(Kubus et al. [2007]), successfully exploit CoG displacement compensation to improve system performance. In other areas it is used to improve robot performance. For example, in underwater robotics dynamic balancing of the CoG is employed in order to achieve better maneuvarbility (Vasilescu et al. [2010]) or for locomotion of a modular robot over uneven and unknown terrain (Moll et al. [2006]).

In this paper, we present an adaptive tracking controller based on output feedback linearization that compensates for dynamical changes in the CoG of the quadrotor. We start by presenting systematic tools for mathematical modeling of nonlinear quadrotor dynamics and kinematics using first principles. Considering the properties of system dynamics, the derived mathematical model is represented with a set of dynamic equations common in robotic manipulator modeling. Using this model, different control techniques are implemented and verified in simulation. In the first stage, a linear PD cascade controller is implemented. This controller fails when dealing with an unbalanced quadrotor, whose center of gravity is changed. In order to deal with this problem, we use input-output feedback linearization to design an adaptive controller to compensate for dynamic changes of the center of gravity. Stability of this algorithm is proven utilizing Lyapunov theory. The proposed controller is an important step towards developing the next generation of agile autonomous aerial vehicles. This control algorithm enables a quadrotor to display agile maneuvers while reconfiguring in real time whenever a change in center of gravity occurs.

The remainder of this paper is organized as follows. Section II presents the nonlinear model of the small-scale quadrotor with emphasis on modeling the rigid body dynamics from Newton-Euler axioms. In Section

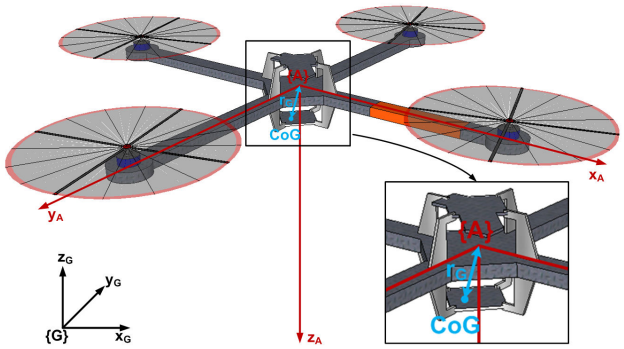

Fig. 1. Hummingbird quadrotor with inertial frames used in this paper.

III we describe the design of controllers. The controllers described in this paper are:

i cascade PD controller;
ii nonlinear controller based on input-output feedback linearization; and
iii adaptive feedback linearization controller.

Section IV provides simulation results. Finally, we draw conclusions in Section V.

2. QUADROTOR MODELING

This section presents a nonlinear dynamic model of a quadrotor, as illustrated in Fig. 1. The quadrotor dynamics are derived from first-principles to describe a six degrees of freedom (6 DOF) rigid body model, driven by forces and moments.

2.1 Quadrotor Kinematics

While analyzing the motion of an aerial vehicle through 6 DOF we define two coordinate frames as indicated in Fig. 1. The moving coordinate frame $\{\mathcal{A}\}$ is fixed to the quadrotor and is called the aircraft-fixed reference frame. The origin of the aircraft-fixed frame is chosen to coincide with the Center of Gravity (CoG) when CoG is in the principal plane of symmetry. The motion of the aircraft-fixed frame is described relative to an inertial reference frame. For small scale UAVs it is assumed that the accelerations of a point on the surface of the Earth can be neglected. As a result of this, a ground-fixed reference frame $\{\mathcal{G}\}$ is considered to be inertial. The position and orientation of the vehicle are described relative to the inertial reference frame $\{\mathcal{G}\}$ while the linear and angular velocities of the vehicle are expressed in the aircraft-fixed coordinate system $\{\mathcal{A}\}$. The following variables are used to describe quadrotor kinematics and dynamics,

$\eta_1 = [\,x\ y\ z\,]^T$ - position of the origin of $\{\mathcal{A}\}$ measured in $\{\mathcal{G}\}$,

$\eta_2 = [\,\phi\ \theta\ \psi\,]^T$ - angles of roll (ϕ), pitch (θ) and yaw (ψ) that parametrize locally the orientation of $\{\mathcal{A}\}$ with respect to $\{\mathcal{G}\}$,

$\nu_1 = [\,u\ v\ w\,]^T$ - linear velocity of the origin of $\{\mathcal{A}\}$ relative to $\{\mathcal{G}\}$ expressed in $\{\mathcal{A}\}$ (i.e., body-fixed linear velocity),

$\nu_2 = [\,p\ q\ r\,]^T$ - angular velocity of $\{\mathcal{A}\}$ relative to $\{\mathcal{G}\}$ expressed in $\{\mathcal{A}\}$ (i.e., body-fixed angular velocity).

$r_G = [\,x_G\ y_G\ z_G\,]^T$ - distance from the origin of $\{\mathcal{A}\}$ to the quadrotor's center of mass.

The transformation matrix between two reference frames is obtained by matrix multiplication of the three basic orthogonal rotation matrices that belong to the special orthogonal group $SO(3,\mathbb{R})$, Arfken [1985]. The aircraft-fixed linear velocity vector ν_1 and the position rate vector $\dot{\eta}_1$ are related through a transformation matrix ${}^G_A R(\eta_2)$ according to

$$\dot{\eta}_1 = \frac{d\eta_1}{dt} = {}^G_A R(\eta_2)\,\nu_1. \tag{1}$$

The aircraft-fixed angular velocity vector ν_2 and the Euler rate vector $\dot{\eta}_2$ are related through a transformation matrix $Q(\eta_2)$ according to:

$$\dot{\eta}_2 = Q(\eta_2)\,\nu_2, \quad Q(\eta_2) = \begin{bmatrix} 1 & s\phi t\theta & c\phi t\theta \\ 0 & c\phi & -s\phi \\ 0 & \frac{s\phi}{c\theta} & \frac{c\phi}{c\theta} \end{bmatrix}, \tag{2}$$

with $Q(\eta_2)$ being singular for $\theta = \pm\frac{\pi}{2}$. This singularity does not represent a problem in our design because our aircraft will not execute aggressive maneuvers as to achieve the pitch of 90°. Otherwise, this problem can be circumvented by many different methods, (e.g., quaternion representation).

The condensed representation of systems kinematics is

$$\begin{bmatrix} \dot{\eta}_1 \\ \dot{\eta}_2 \end{bmatrix} = \begin{bmatrix} {}^G_A R(\eta_2) & 0 \\ 0 & Q(\eta_2) \end{bmatrix} \begin{bmatrix} \nu_1 \\ \nu_2 \end{bmatrix}, \quad \dot{\eta} = J_R(\eta)\,\nu.$$

2.2 Quadrotor Dynamics

We now proceed to present the rigid body equations of motion derived from Euler's first and second axioms. Consider the aircraft-fixed coordinate system frame $\{\mathcal{A}\}$ rotating with angular velocity $\omega = [\omega_1 \quad \omega_2 \quad \omega_3]$ about the ground-fixed coordinate system frame $\{\mathcal{G}\}$. The quadrotor's inertia tensor I_A is defined as:

$$I_A = \begin{bmatrix} I_{xx} & 0 & 0 \\ 0 & I_{yy} & 0 \\ 0 & 0 & I_{zz} \end{bmatrix}, \quad I_A = I_A^T > 0,$$

where I_{xx}, I_{yy} and I_{zz} are the moments of inertia about X_A, Y_A and Z_A axes, respectively. Since the principal axes of $\{\mathcal{A}\}$ are aligned with quadrotor axes, we can write $I_{xy} = I_{yx} = I_{xz} = I_{zx} = I_{zy} = I_{yz} = 0$. In an expanded form, we can write

$$\begin{cases} F_x = m\left[\dot{u} - vr + wq - x_G\left(q^2 + r^2\right) \right. \\ \qquad \left. + y_G\left(pq - \dot{r}\right) + z_G\left(pr + \dot{q}\right)\right] \\ F_y = m\left[\dot{v} - wp + ur + x_G\left(qp + \dot{r}\right) \right. \\ \qquad \left. - y_G\left(p^2 + r^2\right) + z_G\left(qr - \dot{p}\right)\right] \\ F_z = m\left[\dot{w} - uq + vp + x_G\left(rp - \dot{q}\right) \right. \\ \qquad \left. + y_G\left(rq - \dot{p}\right) - z_G\left(q^2 + p^2\right)\right] \\ \\ T_\phi = I_{xx}\dot{p} + \left(I_{zz} - I_{yy}\right) qr \\ \quad + m\left[y_G\left(\dot{w} - uq + vp\right) - z_G\left(\dot{v} - wp + ur\right)\right] \\ T_\theta = I_{yy}\dot{q} + \left(I_{xx} - I_{zz}\right) rp \\ \quad + m\left[z_G\left(\dot{u} - vr + wq\right) - x_G\left(\dot{w} - uq + vp\right)\right] \\ T_\psi = I_{zz}\dot{r} + \left(I_{yy} - I_{xx}\right) pq \\ \quad + m\left[x_G\left(\dot{v} - wp + ur\right) - y_G\left(\dot{u} - vr + wq\right)\right], \end{cases}$$

Vectorial representation of quadrotor's 6 DOF nonlinear dynamic equations of motion can be expressed in a compact form as:

$$M\dot{\nu} + C(\nu)\,\nu + D\nu + g_G(\eta) = \tau, \tag{3}$$

where $\eta = [\eta_1 \quad \eta_2]^T$ is the vector of position and orientation, $\nu = [\nu_1 \quad \nu_2]^T$ is vector of linear and angular velocities and M is the mass and inertia matrix of the quadrotor given by

$$M = \begin{bmatrix} m & 0 & 0 & 0 & mz_G & -my_G \\ 0 & m & 0 & -mz_G & 0 & mx_G \\ 0 & 0 & m & my_G & -mx_G & 0 \\ 0 & -mz_G & my_G & I_x & 0 & 0 \\ mz_G & 0 & -mx_G & 0 & I_y & 0 \\ -my_G & mx_G & 0 & 0 & 0 & I_z \end{bmatrix},$$

$$M = M^T > 0.$$

This matrix representation is unique. In contrast, there is a large number of possible parametrizations for matrix $C(\nu)$ which consist of Coriolis and centripetal terms. Using results from (Sagatun and Fossen [1991]), we can achieve a parametrization such that $C(\nu)$ is skew-symmetric

$$C(\nu) = \begin{bmatrix} 0 & 0 & 0 & m(y_G\dot{\theta}+z_G\dot{\psi}) & -m(x_G\dot{\theta}-\dot{z}) & -m(x_G\dot{\psi}+\dot{y}) \\ 0 & 0 & 0 & -m(y_G\dot{\phi}+\dot{z}) & m(z_G\dot{\psi}+x_G\dot{\phi}) & -m(y_G\dot{\psi}-\dot{x}) \\ 0 & 0 & 0 & -m(z_G\dot{\phi}-\dot{y}) & -m(z_G\dot{\theta}+\dot{x}) & m(x_G\dot{\phi}+y_G\dot{\theta}) \\ m(y_G\dot{\theta}+z_G\dot{\psi}) & -m(x_G\dot{\theta}-\dot{z}) & -m(x_G\dot{\psi}+\dot{y}) & 0 & 0 & 0 \\ -m(y_G\dot{\phi}+\dot{z}) & m(z_G\dot{\psi}+x_G\dot{\phi}) & -m(y_G\dot{\psi}-\dot{x}) & 0 & 0 & 0 \\ -m(z_G\dot{\phi}-\dot{y}) & -m(z_G\dot{\theta}+\dot{x}) & m(x_G\dot{\phi}+y_G\dot{\theta}) & 0 & 0 & 0 \end{bmatrix}.$$

Decomposing the vectors of external forces F_E and moments T_E we obtain three distinct vectors $D\nu$, $g_G(\eta)$ and τ. Air friction is given by $D\nu$, where D is the damping matrix

$$D = diag\,(\,c_{\mu x},\ c_{\mu y},\ c_{\mu z},\ c_{\mu\phi},\ c_{\mu\theta},\ c_{\mu\psi}\,),$$
$$D = D^T > 0, \dot{D} = 0,$$

and c_{μ_x}, c_{μ_y}, c_{μ_z}, $c_{\mu\phi}$, $c_{\mu\theta}$, $c_{\mu\psi}$ are air friction coefficients. With $g_G(\eta)$ we denote the vector of gravitational forces and moments

$$f_G(\eta_2) = {}^G_A R^{-1}(\phi,\theta) \begin{bmatrix} 0 \\ 0 \\ -mg \end{bmatrix},$$

$$g_G(\eta_2) = -\begin{bmatrix} f_G(\eta_2) \\ r_G \times f_G(\eta_2) \end{bmatrix},$$

where g represents the gravitational constant. Control inputs are given as vector τ

$$f_\tau(\eta_2) = {}^G_A R^{-1}(\eta_2) \begin{bmatrix} 0 \\ 0 \\ U_1 \end{bmatrix},\ \tau(\eta_2, U) = \begin{bmatrix} f_\tau(\eta_2) \\ U_2 \\ U_3 \\ U_4 \end{bmatrix},$$

where U_1, U_2, U_3, U_4 represent control forces generated by four quadrotor rotors (Bouabdallah et al. [2004]).

3. CONTROLLER DESIGN

3.1 Control Design Using Cascade PD Controllers

In this section we present the design of the output feedback controller using cascade PD control. For the design, we are using the model presented in Sec. 2, which is linearized around an equilibrium point and can be represented in state space form as,

$$\dot{q} = A\,q + B\,u, \quad y = F\,q, \tag{4}$$

where $u = [U_1 \ U_2 \ U_3 \ U_4]^T$ is the input vector, $y = [x \quad y \quad z \quad \phi \quad \theta \quad \psi]^T$ is the output vector, and $q = [\eta \quad \nu]^T, q \in \mathbb{R}^{12}$ is the state space vector. As the design technique we use the classical pole placement. Controller scheme is given in Fig. 2(a). The scheme of the controller consists of six cascaded PD controllers where cascade is placed over control of the (pitch $\leftrightarrow$ x directional movement) and (roll $\leftrightarrow$ y directional movement) due to the properties of the quadrotor dynamics. The described controller is then used to control the full nonlinear quadrotor model (3). Stability of the output feedback controller using cascade PD control is verified through MIMO Bode analysis using Control Systems Toolbox. Controller performance is verified through simulation results provided in Fig. 3(a). Linear controllers are sensitive to model uncertainties, and our simulation results have confirmed that the proposed controller is not able to deal with changes in CoG of the quadrotor (Fig. 4). This motivates us to design a nonlinear controller presented in the following subsection.

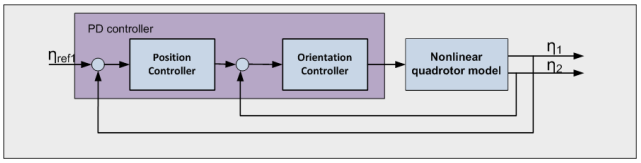

(a) Cascade PD controller

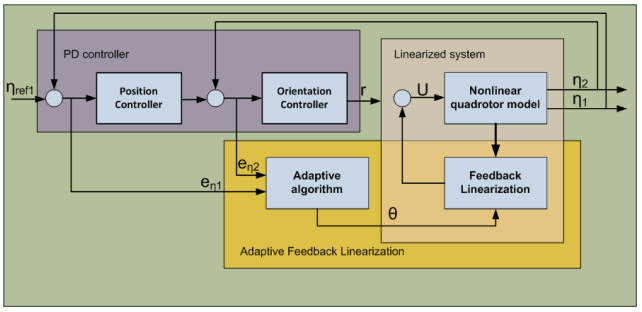

(b) Adaptive feedback linearization controller

Fig. 2. Controller schemes for PD controller and adaptive feedback linearization controller.

3.2 Feedback Linearization

The basic idea of feedback linearization is to transform nonlinear system dynamics into linear system dynamics (Isidori [2001]), (Slotine and Li [1991]), (Khalil [2002]). Conventional control techniques like pole placement and linear quadratic optimal control theory can then be applied to the linear system. In robotics, this technique is commonly referred to as computed torque control (Slotine and Li [1991]). The control objective is to transform the vehicle dynamics (3) into a linear system $\dot{\nu} = \vartheta$, where ϑ can be interpreted as a commanded acceleration vector. The nonlinearities can be canceled out by simply selecting the control algorithm as follows

$$\tau = C(\nu)\,\nu + D\nu + g_G(\eta) + M\vartheta, \tag{5}$$
$$\dot{\nu} = \vartheta,$$

where the commanded acceleration vector ϑ is chosen using pole placement technique. Considering the nature of the dynamical system we are dealing with, we can write

$$y = F\eta = [z \quad \phi \quad \theta \quad \psi]^T,$$
$$\dot{y} = F\dot{\eta} = F\nu,$$
$$\ddot{y} = F\ddot{\eta} = F\dot{\nu} = FM^{-1}\left[-C(\nu)\nu - D\nu - g_G(\eta) + \tau\right],$$
$$\ddot{y} = F\dot{\nu} = F\vartheta,$$

where $y \in \mathbb{R}^4$ represents system outputs. Due to this property, we can proceed with the controller design using the input-output feedback linearization algorithm presented in (Isidori [2001]). The model derived in (Sec. 2) can be represented in state space form

$$\dot{q} = f(q) + g(q)\,u, \quad y = h(q), \tag{6}$$

where $u = [u_1\, u_2 \ldots u_m]^T$, $y = [y_1\, y_2 \ldots y_l]^T$, and

$$g(q) = [g_1(q) \ldots g_m(q)], \quad h(q) = [h_1(q) \ldots h_l(q)]^T,$$

are a $n \times m$ matrix, an l-dimensional vector, and n is the system state space dimension, respectively. Since the quadrotor model is a nonlinear underactuated system (i.e., the number of inputs m is less than the number of outputs l), in order to deal with this restriction, we exploit the differential flatness property (Fliess et al. [1994]). The nonlinear system given in (6) has a relative degree r_i at a point q^0 if

$$L_{gj}L_{gf}^{k}h_i(q) = 0,$$

for all $1 \le j \le 4$, $k < r_i - 1$, $1 \le i \le 4$, and for all q in a neighborhood of q^o the 4×4 matrix

$$\alpha(q) = \begin{bmatrix} L_{g1}L_f^{r_1-1}h_1(q) \ldots L_{g4}L_f^{r_1-1}h_1(q) \\ \vdots \\ L_{g1}L_f^{r_4-1}h_4(q) \ldots L_{g4}L_f^{r_4-1}h_4(q) \end{bmatrix},$$

is nonsingular at $q = q^o$ (Isidori [2001]). If these two conditions are satisfied, we can write,

$$\begin{bmatrix} y_1^{r_1} \\ y_2^{r_2} \\ y_3^{r_3} \\ y_4^{r_4} \end{bmatrix} = \begin{bmatrix} L_f^{r_1} \\ L_f^{r_2} \\ L_f^{r_3} \\ L_f^{r_4} \end{bmatrix} \alpha(q).$$

If $\alpha(q)$ is invertible at q^o, then the state feedback is given by $u = \alpha(q)^{-1}[-b(q) + \vartheta]$ and it will result in a closed-loop system that is linear from input u to output y. Due to the fact that the quadrotor model considered in this paper is a complex MIMO nonlinear system, before starting the design process, we must first check the existence conditions for feedback linearization (Isidori [2001]). Since the matrix $\alpha(q^o)$ is nonsingular, we can use exact state feedback to linearize the system and obtain its relative degree. The relative degree is $r = 2+2+2+2 = 8$, and the dimension of the system is $n = 12$. Hence, four states belong to zero dynamics. Therefore the system is not fully feedback linearizable but only partially, and can be decomposed into a linear and controllable part, and a part which represents zero dynamics. In order to be able to design a controller which will stabilize and control this type of a system, we have to identify which states belong to the zero dynamics and to prove that they are stable. We approach the notion of zero dynamics through the idea of *zeroing the output* (Isidori [2001]). We define four states of the zero dynamics as follows

$$\begin{aligned} \dot{q}_1 &= q_7, & \dot{q}_2 &= q_8, \\ \dot{q}_7 &= -\frac{c_{\mu x}}{m}q_7, & \dot{q}_8 &= -\frac{c_{\mu y}}{m}q_8, \end{aligned} \tag{7}$$

where $q \in \mathbb{R}^{12}$ is a state vector and $\frac{c_{\mu x}}{m}$ and $\frac{c_{\mu y}}{m}$ are positive constants.

Theorem 1. The zero dynamics given by (7) is stable.

Proof 1. Since the zero dynamics in this case is a linear system, the stability analysis is trivial. Considering the structure of the system (7), we can analyze it as two separate systems of second order $\dot{\rho} = A_i\rho$, $i = 1, 2$, $\rho \in \mathbb{R}^2$. Therefore, we can use the well-known theory of second-order linear systems (Khalil [2002]). Since each of these systems has one eigenvalue of matrix A_i zero and the other eigenvalue has a negative real part (i.e., it is stable), the matrices A_i have a nontrivial null space. Any vector in the null space of A_i is an equilibrium point for the system, i.e., the system has an equilibrium subspace rather than an equilibrium point. From the phase portrait we can see that all trajectories converge to the equilibrium subspace (q_7 axis i.e., q_8 axis) since the nonzero eigenvalues are stable. Therefore, the zero dynamics are stable, and we are able to design the controller to stabilize and control the nonlinear quadrotor model. □

The proposed controller consists of two parts: the first part is nonlinear which linearizes the system through feedback linearization; the second part of the controller is linear and its purpose is to stabilize and control all six DoF of the quadrotor (i.e., orientation η_2 and position η_1) through a cascade structure. The proposed control algorithm is implemented in Matlab and simulation results show its efficiency (Fig. 3(b)). One of the main drawbacks of feedback linearization is that the controller is not able to deal with model uncertainties. In this paper we use the change in CoG as the uncertain parameter. The controller based on feedback linearization derived above fails to stabilize the unbalanced quadrotor (Fig. 5). This fact has motivated us to design an adaptive controller presented in the next subsection.

3.3 Adaptive Control Algorithm

So far, we have only discussed feedback linearization under the assumption that all model parameters are known. In this subsection, we derive a parameter adaptation rule that is utilized together with the previously derived control algorithm. The derivation of the adaptation rule is carried out using the algorithm proposed in (Slotine and Li [1991]). Considering the nonlinear equations of motion (3), we are taking the control algorithm to be

$$\tau = \hat{C}(\nu)\nu + D\nu + \hat{g}_G(\eta) + \hat{M}\vartheta, \tag{8}$$

where the *hat* denotes estimates of the adaptive parameter. Now, the error dynamics can be denoted as

$$M[\dot{\nu} - r] = \left[\hat{M} - M\right]\vartheta + \left[\hat{C}(\nu) - C(\nu)\right]\nu + \left[\hat{g}_G(\eta) - g_G(\eta)\right].$$

Since quadrotor equations of motion are linear in the parameter vector $\gamma = r_G$, we can apply the following parameterization

$$\Phi(\nu,\eta)\tilde{\gamma} = \left[\hat{M} - M\right]\vartheta + \left[\hat{C}(\nu) - C(\nu)\right]\nu + \left[\hat{g}_G(\eta) - g_G(\eta)\right].$$

In the above expression, $\tilde{\gamma} = \hat{\gamma} - \gamma$ is the unknown parameter error vector and $\Phi(\nu,\eta)$ is a known matrix function of measured signals usually referred to as the regressor matrix. Writing the expression for the tracking error dynamics in state-space form yields,

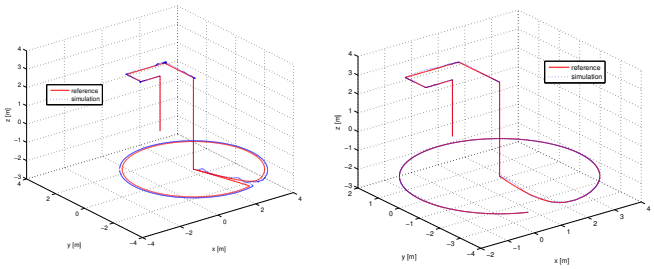

(a) Output feedback with cascade PD (b) Feedback Linearization

Fig. 3. Effectiveness of proposed control algorithms for tracking when the quadrotor is balanced.

$$\dot{e} = A\,e + B\Phi\left(\nu,\eta\right)\tilde{\gamma}, \tag{9}$$

where $e = \left[\tilde{\eta} \quad \dot{\tilde{\eta}}\right]^T = \left[\eta_{ref} - \eta \quad \dot{\eta}_{ref} - \dot{\eta}\right]^T$, A matrix contains outer controller parameters and is proven to be Hurwitz and $B = \left[0 \quad M^{-1}\right]^T$.

Theorem 2. The tracking error given by (9) is asymptotically stable and parameter error $\tilde{\gamma} = \hat{\gamma} - \gamma$ is bounded.

Proof 2. We start by choosing a Lypunov function candidate as

$$V(e,\tilde{\gamma},t) = e^T P e + \tilde{\gamma}^T \Gamma^{-1} \tilde{\gamma},$$

where $P = P^T > 0$ satisfies Lyapunov stability equation for linear systems and $\Gamma = \Gamma^T > 0$. By differentiating $V(e,\tilde{\gamma},t)$ with respect to time we get,

$$\dot{V}(e,\tilde{\gamma},t) = e^T(A^T P + PA)e + 2e^T PB\Phi\left(\nu,\eta\right)\tilde{\gamma} - 2\tilde{\gamma}^T\Gamma^{-1}\dot{\tilde{\gamma}},$$

By choosing the parameter update rule (assuming $\dot{\gamma} = 0$) as

$$\dot{\hat{\gamma}} = -\Gamma\ \Phi^T\left(\nu,\eta\right)\ B^T\ P^T e,$$

we get

$$\dot{V}(e,\tilde{\gamma},t) = e^T(A^T P + PA)e \leq -e^T Q e \leq 0,$$

where $Q = Q^T > 0$ is the matrix that satisfies Lyapunov stability equation for linear systems. However, $\dot{V}(e,\tilde{\gamma},t)$ is only negative semidefinite because $\dot{V}(e,\tilde{\gamma},t) = 0$ for $e = 0$ irrespective of the value of $\tilde{\gamma}$; that is, $\dot{V}(e,\tilde{\gamma},t) = 0$ along $\tilde{\gamma}$ - axis. By showing that $\ddot{V}(e,\tilde{\gamma},t)$ is bounded we show that $\dot{V}(e,\tilde{\gamma},t)$ is uniformly continuous in time. Now, by applying Barbalat's lemma we prove that e asymptotically converges to zero and $\tilde{\gamma}$ is bounded.□

The proposed adaptive controller showed in (Fig. 2(b)) is implemented in Matlab/Simulink and its performance is shown in (Fig. 6).

4. SIMULATION RESULTS

The controllers derived and presented in Sec. 3 are simulated using Matlab/Simulink. The linear output feedback controller (Sec. 3.1) is used to control the full nonlinear quadrotor model given in Sec. 2. The simulations show that the system tracks a given trajectory with accuracy when dealing with a balanced nonlinear quadrotor model (Fig. 3(a)). In the case of an unbalanced quadrotor this controller fails to stabilize the system (Fig. 4). The non-

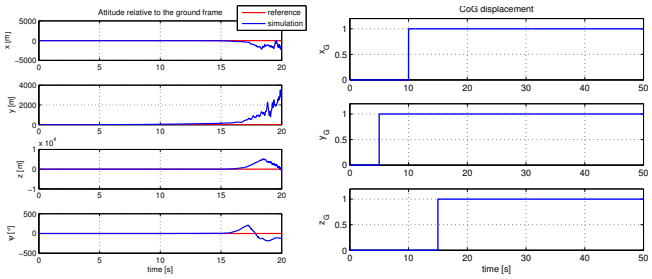

(a) Attitude (b) Coordinates of changed CoG

Fig. 4. Failure of the linear output feedback control algorithm to stabilize the quadrotor due to changes in CoG.

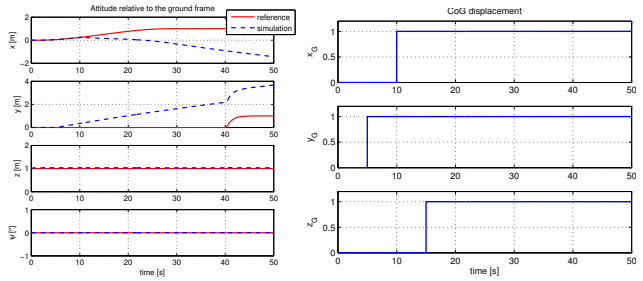

(a) Attitude (b) Changed coordinates of CoG

Fig. 5. Failure of the feedback linearization algorithm to stabilize the quadrotor due to changes in CoG.

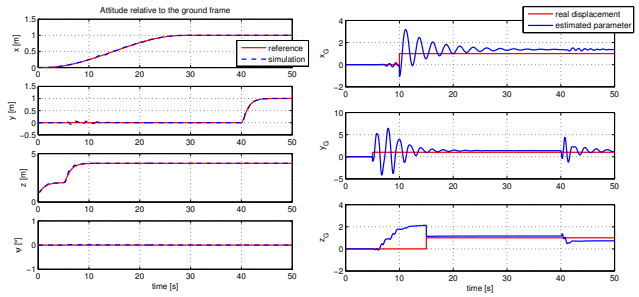

(a) Attitude (b) Real and estimated coordinates of CoG

Fig. 6. Performance of the adaptive feedback linearization controller used for stabilization of change in CoG.

linear controller based on the input-output feedback linearization (Sec. 3.2) yields an accurate tracking performance when dealing with a balanced nonlinear quadrotor model (Fig. 3(b)). In the case of an unbalanced quadrotor this controller fails to stabilize the system as well (Fig. 5).

By adding the adaptive part to the nonlinear controller based on output feedback linearization (Sec. 3.3), we solve the stabilization and tracking problem. The proposed algorithm succeeds in stabilizing an unbalanced quadrotor (Fig. 6). The adaptive feedback linearization shows good tracking performance when dealing with dynamical changes in quadrotor CoG (Fig. 7).

5. CONCLUSIONS

In this paper we present a systematic approach to derive a quadrotor model considering changes in aircraft CoG. We show the design methodology for three different controllers and confirm by simulation that the linear PD controller and feedback linearization controller are not able to cope with dynamic CoG changes. The adaptive controller, on

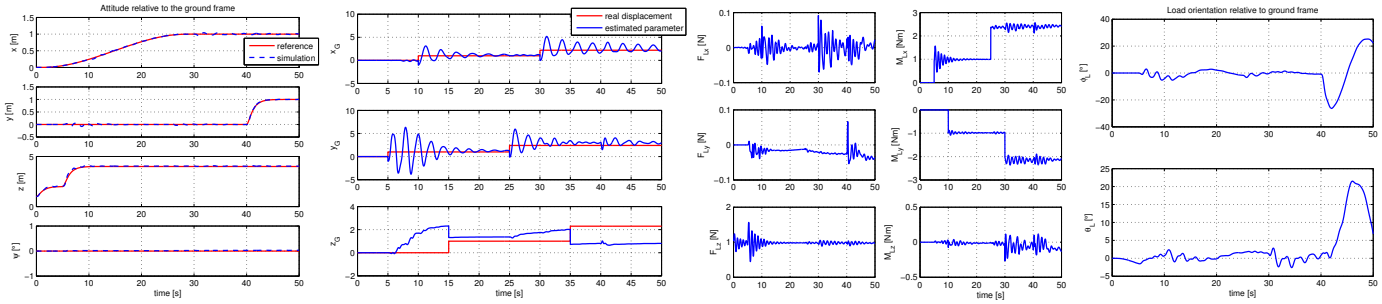

(a) Attitude (b) Estimated and real CoG parameters (c) Forces and moments from suspended load (d) Load Orientation

Fig. 8. Robustness of adaptive feedback linearization algorithm used for tracking while compensating for dynamic change in CoG.

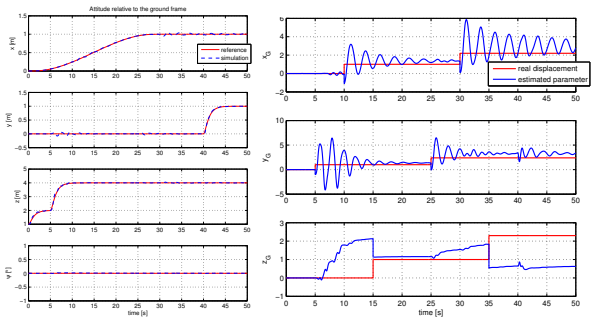

(a) Attitude (b) Changed coordinates of CoG and estimated parameters

Fig. 7. Adaptive feedback linearization algorithm used for tracking while compensating for dynamic change in CoG.

the other hand, is able to stabilize the system and compensate for dynamical changes in the quadrotor CoG. The proposed control algorithm is an important step towards developing the next generation of agile autonomous aerial vehicles. This adaptive control algorithm enables a quadrotor UAV to perform agile maneuvers while reconfiguring in real-time whenever a change in center of gravity occurs. Moreover, the control algorithm exhibits robustness (see Fig. 8) with respect to the external disturbance forces and moments generated by dynamic changes in the quadrotor CoG. In future work we will consider a quadrotor carrying an external suspended load and experimentally verify the applicability of the proposed adaptive control algorithm.

ACKNOWLEDGEMENTS

Partial support was provided by NSF grants ECCS CAREER #0811347, CNS #0709329, and ECCS #1027775, and by DOE URPR (University Research Program in Robotics) grant DE-FG52-04NA25590.

REFERENCES

Arfken, G. (1985). *Mathematical Methods for Physicists*. Academic Press, 3rd edition.

AscendingTechnologies (2010). http://www.asctec.de/.

Bouabdallah, S., Murrieri, P., and Siegwart, R. (2004). Design and control of an indoor micro quadrotor. In *Proc. of ICRA*, volume 5, 4393–4398. Barcelona, Spain.

Bouabdallah, S., Murrieri, P., and Siegwart, R. (2005). Towards autonomous indoor micro VTOL. *Autonomous Robots*, 18, 171–183.

Castillo, P., Lozano, R., and Dzul, A. (2005). Stabilization of a mini rotorcraft with four rotors. *Control Systems Magazine, IEEE*, 25, 45–55.

Fliess, M., Levine, J., Martin, P., and Rouchon, P. (1994). Flatness and defect of nonlinear systems:Introductory theory and examples. CAS internal report A-284.

He, R., Prentice, S., and Roy, N. (2008). Planning in information space for a quadrotor helicopter in a gps-denied environment. In *Proc. of ICRA*, 1814–1820. Pasadena, CA, USA.

Hoffmann, G., Huang, H., Waslander, S., and Tomlin, C. (2007). Quadrotor helicopter flight dynamics and control: Theory and experiment. In *AIAA Guidance, Navigation and Control Conference and Exhibit*. Reno, NV, USA.

How, J., Bethke, B., Frank, A., Dale, D., and Vian, J. (2008). Real-time indoor autonomous vehicle test environment. *Control Systems Magazine, IEEE*, 28(2), 51–64.

Huang, H., Hoffmann, G., Waslander, S., and Tomlin, C. (2009). Aerodynamics and control of autonomous quadrotor helicopters in aggressive maneuvering. In *Proc. of ICRA*, 3277–3282. Kobe, Japan.

Isidori, A. (2001). *Nonlinear Control Systems*. Springer, 3rd edition.

Khalil, H.K. (2002). *Nonlinear Systems*. Prentice Hall, 3rd edition.

Kubus, D., Kroger, T., and Wahl, F. (2007). On-line rigid object recognition and pose estimation based on inertial parameters. In *Proc. of IROS*, 1402–1408. San Diego, CA, USA.

Michael, N., Fink, J., and Kumar, V. (2009). Cooperative manipulation and transportation with aerial robots. In *Proc. of Robotics: Science and Systems*. Seattle, WA.

Moll, M., Will, P., Krivokon, M., and Shen, W.M. (2006). Distributed control of the center of mass of a modular robot. In *Proc. of IROS,*, 4710–4715. Beijing, China.

Sagatun, S. and Fossen, T. (1991). Lagrangian formulation of underwater vehicles' dynamics. In *Conference Proceedings of Systems, Man, and Cybernetics*, volume 2, 1029–1034. Charlottesville, VA.

Slotine, J. and Li, W. (1991). *Applied Nonlinear Control*. Prentice-Hall.

Vasilescu, I., Detweiler, C., Doniec, M., Gurdan, D., Sosnowski, S., Stumpf, J., and Rus, D. (2010). A hovering energy efficient underwater robot capable of dynamic payloads. *The Int.Journal of Robotics Research*, 29(5), 547–570.